NOTES:

REV.	DESCRIPTION	DATE	APPROVED
A		10/21/2025	

REVISIONS

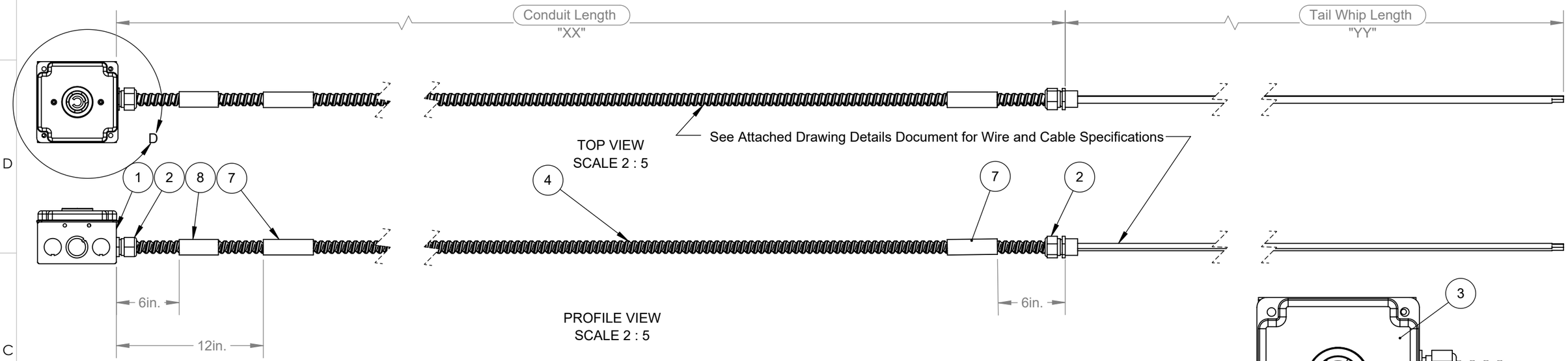

TOP VIEW
SCALE 2 : 5

PROFILE VIEW
SCALE 2 : 5

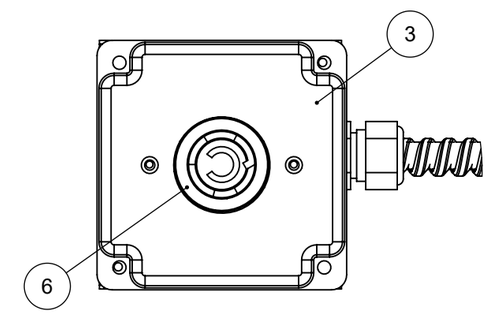

DETAIL D
SCALE 2 : 5

ITEM NO.	PART NUMBER	DESCRIPTION	QTY.
1	270-4400-00	Enclosure, Electrical, Box, 4in Sq, 2.125in deep, 0.5+0.75in knockout, Welded	1
2	300-3052-00	Cable Grip, 0.5NPT, 0.375-0.5" cable, Zinc	2
3	281-416S-00	Plate, 4x4, Crushed corner, Single 1.6" Hole, Galvanized	1
4	085-M410-10	4 Cond 10AWG, (6-3 industry) Stranded, MC Cable, 600V, Black, Blue, Red Green, UL PJAZ, OD0.622", Steel	1
7	UL Label	UL Label (See Sheet 2 for Details)	2
8	Sup Label	Optional Addtional Label (See Sheet 3 for Details)	1

PROPRIETARY AND CONFIDENTIAL

This drawing and its specifications are the property of ENCONNEX and shall not be copied, reproduced, or used in whole or in part, as the basis for the manufacture or sale of items without written permission from ENCONNEX. This drawing is based upon the latest available information and is subject to change without notice.

UNITS: FEET [in]

UNLESS OTHERWISE SPECIFIED
X = ± 1
X.X = ± 0.5
X.XX = ± 0.30
X.XXX = ± 0.130
ANGULAR
X = 1°
.X = 0.5°
.XX = 0.25°

COMMENTS:

	NAME	DATE
DRAWN BY	CAS	
APP. BY	CHUCK SCHOTBORGH	10/21/2025

INTERPRET TO ASME Y14.100

ENCONNEX
4670 AIRCENTER CIRCLE
RENO, NV 89502

MATERIAL: N/A

FINISH: N/A

CLASS: N/A

ECO NUMBER:

DEBURR AND BREAK SHARP EDGES/CONTOURS AT 0.2mm MAX

DESCRIPTION:
WHIP, L5-20,CONNECTOR, NEMA, L5-20R, RECEPTACLE, 2PIN+E, FEMALE, MOUNTED, SCREW TERMINAL, 20A, LISTED, ISOLATED GROUND 4X4TEMPLATE BOX

SIZE: B

DRAWING NO: PWXX-L520-XXSALX(002)

REV NO: A

SCALE: 1:10

WEIGHT:

SHEET: 1 OF 3

NOTES:

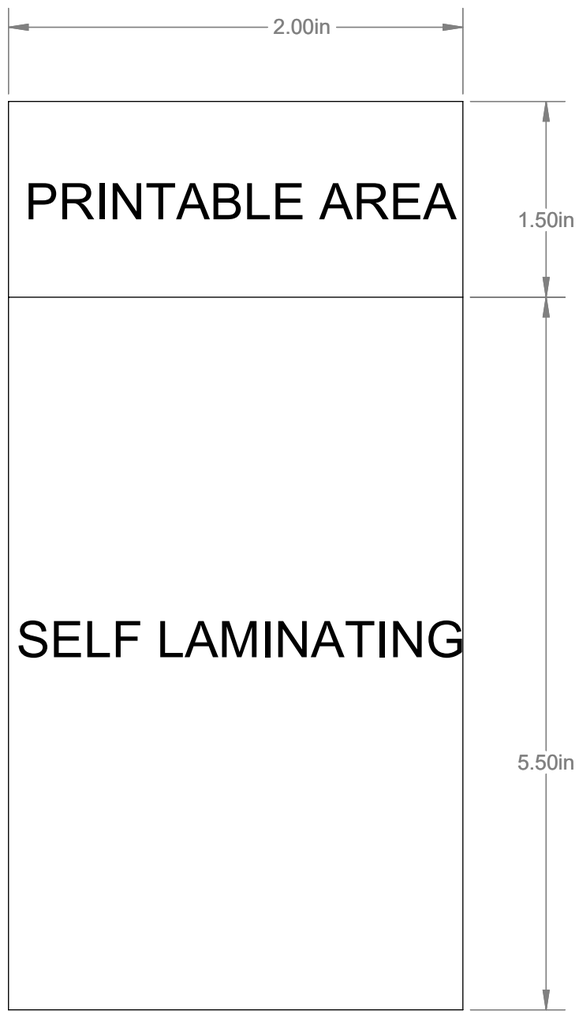

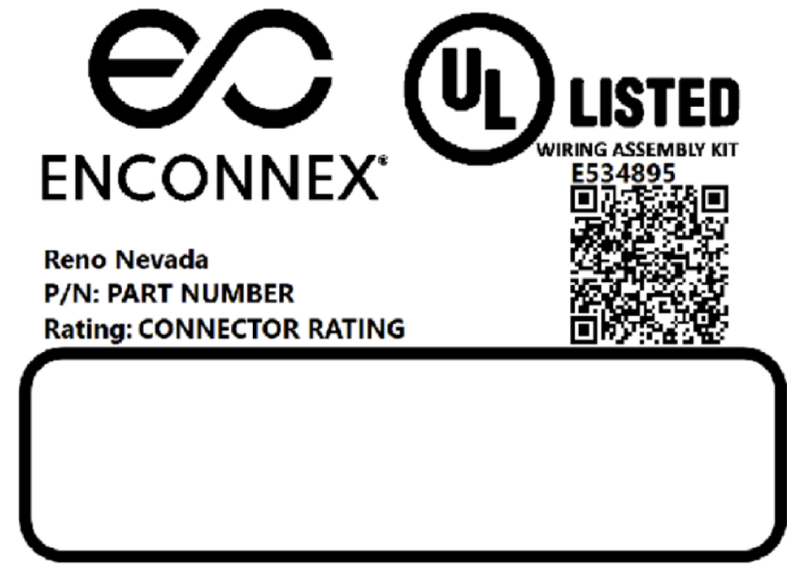

TEXT VARIES WITH SKU
PLACEHOLDER VALUES SHOWN
SCALE 3:1

PROPRIETARY AND CONFIDENTIAL

This drawing and its specifications are the property of ENCONNEX and shall not be copied, reproduced, or used in whole or in part, as the basis for the manufacture or sale of items without written permission from ENCONNEX. This drawing is based upon the latest available information and is subject to change without notice.

UNLESS OTHERWISE SPECIFIED
X = ± 1
X.X = ± 0.5
X.XX = ± 0.30
X.XXX = ± 0.130
ANGULAR
X = 1°
.X = 0.5°
.XX = 0.25°

COMMENTS:

4670 AIRCENTER CIRCLE
RENO, NV 89502

MATERIAL: N/A

DESCRIPTION: WHIP, L5-20,CONNECTOR, NEMA, L5-20R, RECEPTACLE, 2PIN+E, FEMALE, MOUNTED, SCREW TERMINAL, 20A, LISTED, ISOLATED GROUND 4X4TEMPLATE BOX

	NAME	DATE
DRAWN BY	CAS	
APP. BY	CHUCK SCHOTBORGH	10/21/2025

FINISH: N/A
CLASS: N/A
ECO NUMBER:
DEBURR AND BREAK SHARP EDGES/CONTOURS AT 0.2mm MAX

SIZE: B
DRAWING NO: PWxx-L520-xxSALx(002)
REV NO:2 A

UNITS: FEET [in]
INTERPRET TO ASME Y14.100
SCALE: 1:5
WEIGHT:
SHEET: 2 OF 3

NOTES:

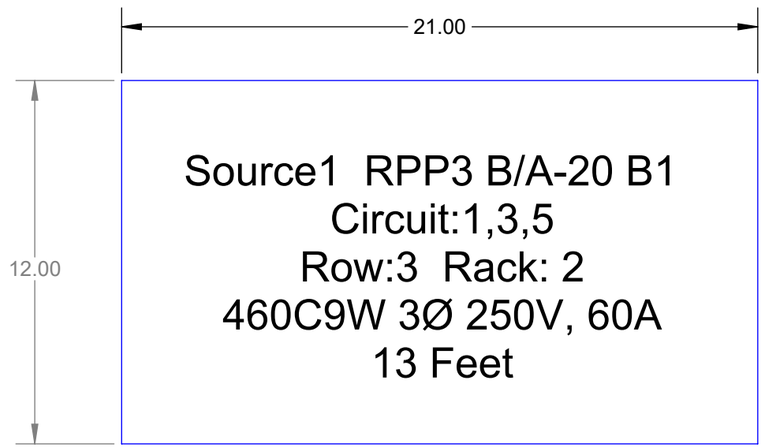

ENLARGED FOR CLARITY, ACTUAL TEXT IS ARIAL 9PT

OPTIONAL ADDITIONAL LABEL
TEXT VARIES WITH SKU
PLACEHOLDER VALUES SHOWN
LABEL/TEXT COLOR VARIES WITH SKU
CLEAR LAMINATION APPLIED OVER LABEL

PROPRIETARY AND CONFIDENTIAL

This drawing and its specifications are the property of ENCONNEX and shall not be copied, reproduced, or used in whole or in part, as the basis for the manufacture or sale of items without written permission from ENCONNEX. This drawing is based upon the latest available information and is subject to change without notice.

UNLESS OTHERWISE SPECIFIED
X = ± 1
X.X = ± 0.5
X.XX = ± 0.30
X.XXX = ± 0.130
ANGULAR
X = 1°
.X = 0.5°
.XX = 0.25°

COMMENTS:

	NAME	DATE
DRAWN BY	CAS	
APP. BY	CHUCK SCHOTBORGH	10/21/2025

UNITS: FEET [in]

INTERPRET TO ASME Y14.100

4670 AIRCENTER CIRCLE
RENO, NV 89502

MATERIAL: N/A

FINISH: N/A

CLASS: N/A

ECO NUMBER:

DEBURR AND BREAK SHARP EDGES/CONTOURS AT 0.2mm MAX

DESCRIPTION:
WHIP, L5-20,CONNECTOR, NEMA, L5-20R, RECEPTACLE, 2PIN+E, FEMALE, MOUNTED, SCREW TERMINAL, 20A, LISTED, ISOLATED GROUND 4X4TEMPLATE BOX

SIZE: B

DRAWING NO: PWxx-L520-xxSALx(002)

REV NO:3 A

SCALE: 1:5

WEIGHT:

SHEET: 3 OF 3